mm [inch]

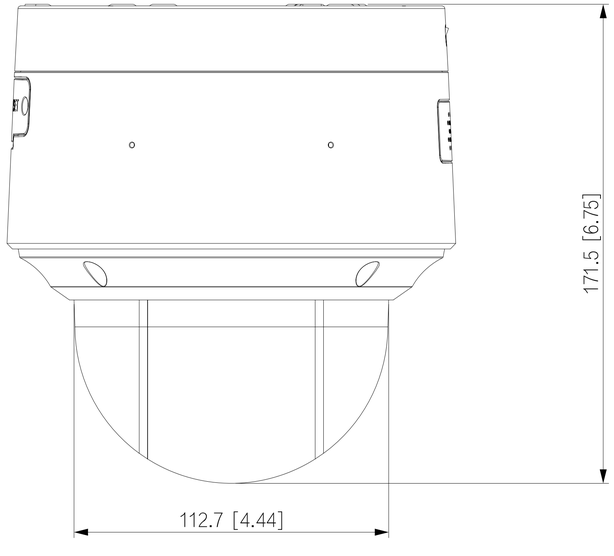
171.5 [6.75]
112.7 [4.44]

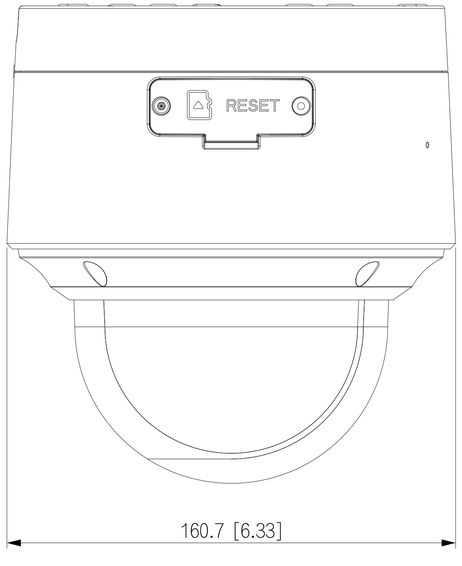
RESET
160.7 [6.33]

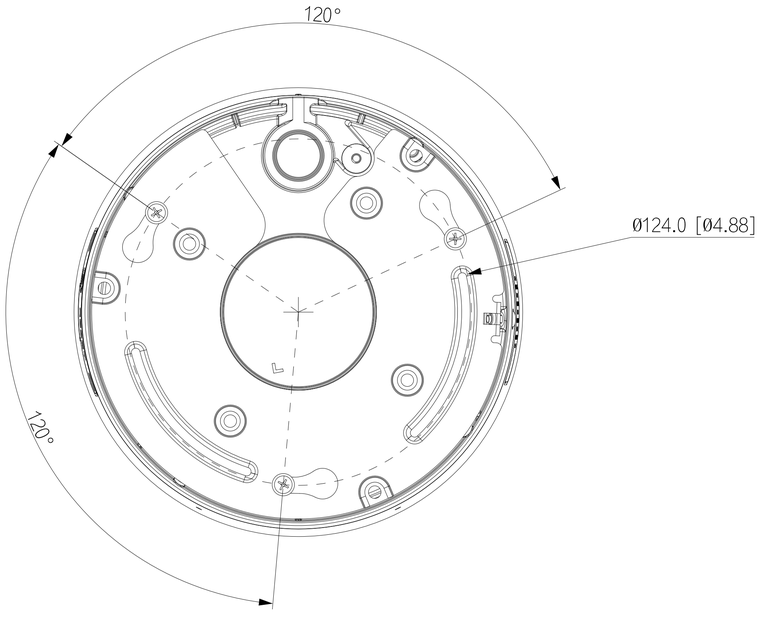
120°
120°
Ø124.0 [Ø4.88]

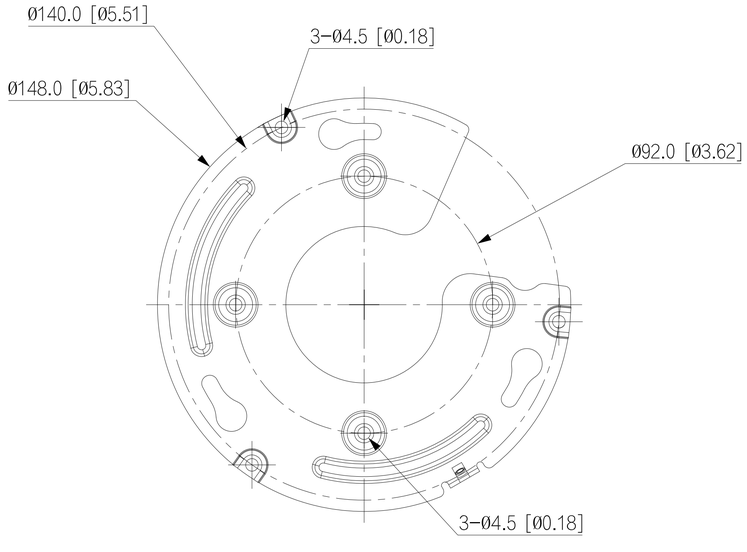
Ø140.0 [Ø5.51]
3-Ø4.5 [Ø0.18]
Ø148.0 [Ø5.83]
Ø92.0 [Ø3.62]
3-Ø4.5 [Ø0.18]