D001175648-001_Mounting_Instructions_Aperio_KL100_Page_1_Rev_06_Print.pdf 1 2023-08-03 10:35:36

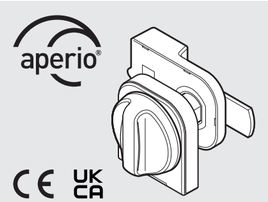

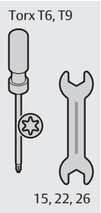

Hereby, ASSA ABLOY Opening Solutions CZ s.r.o. declares that the radio equipment type KL100 is in compliance with Directive 2014/53/EU. The full text of the EU declaration of conformity is available at the following internet address:

https://www.assaabloyopeningsolutions.com/en/aperio/documents

Aperio® KL100

ASSA ABLOY
Opening Solutions

Mounting Instructions

Experience a safer and more open world

D001175648-001 rev. 06 20230803

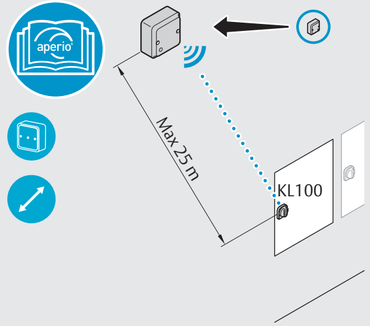

Accessories/Extras

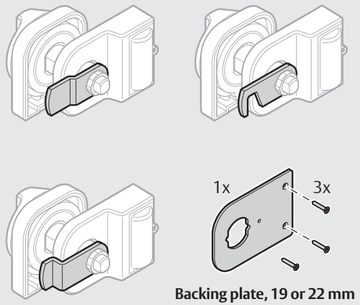

Backing plate, 19 or 22 mm
(recommended optional accessory for wooden door)

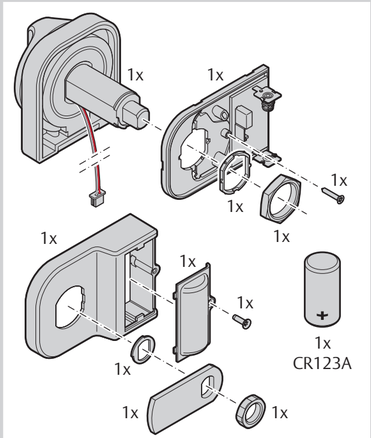

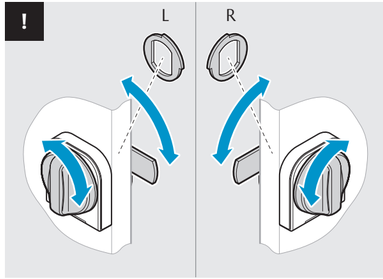

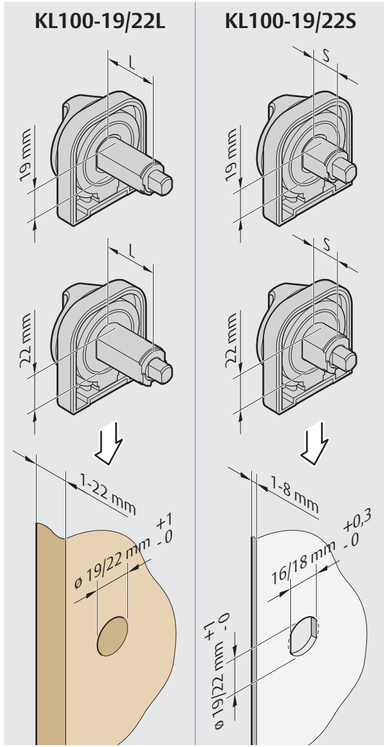

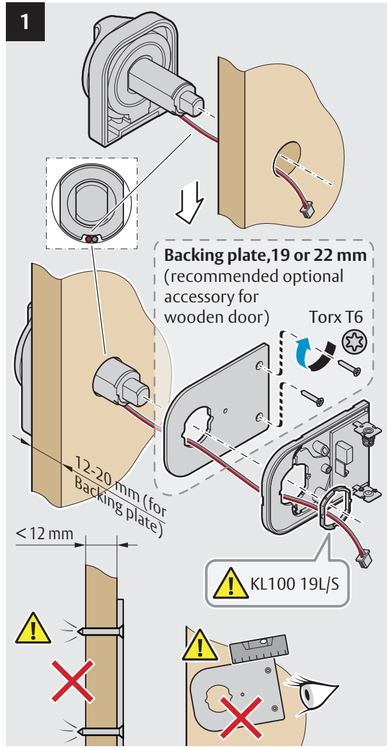

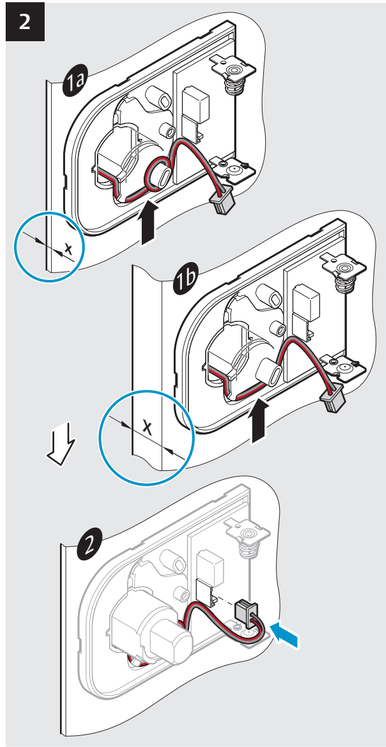
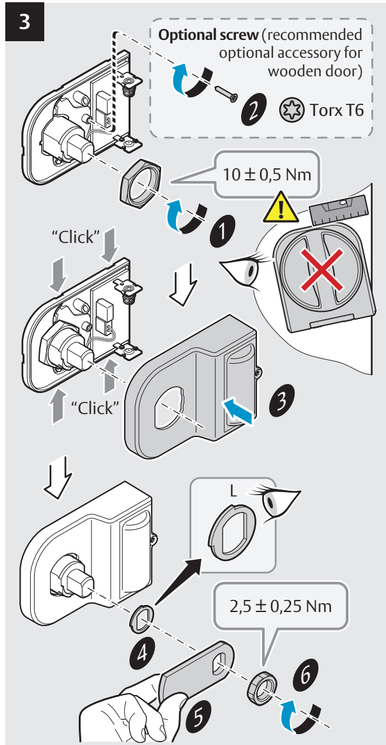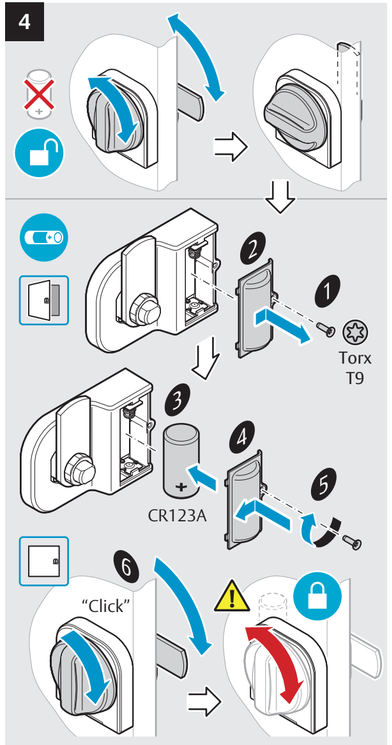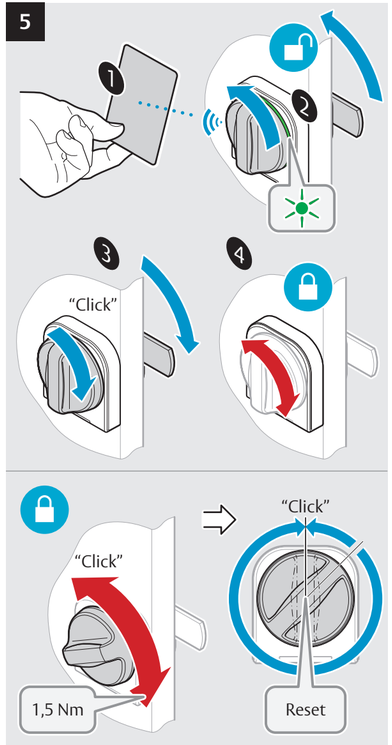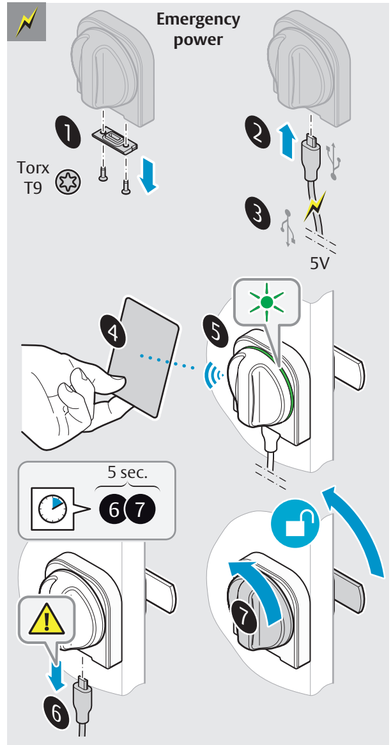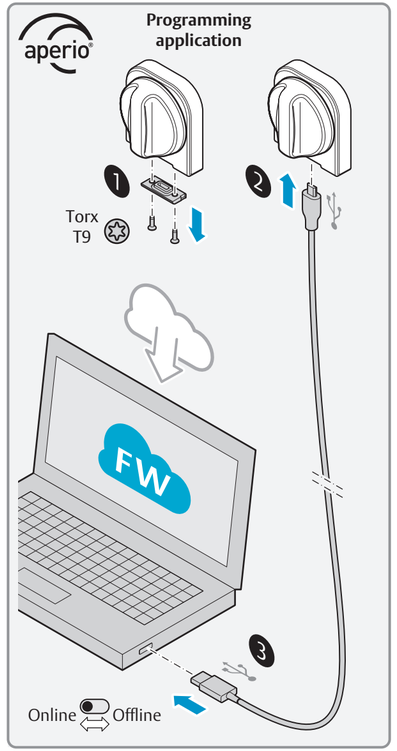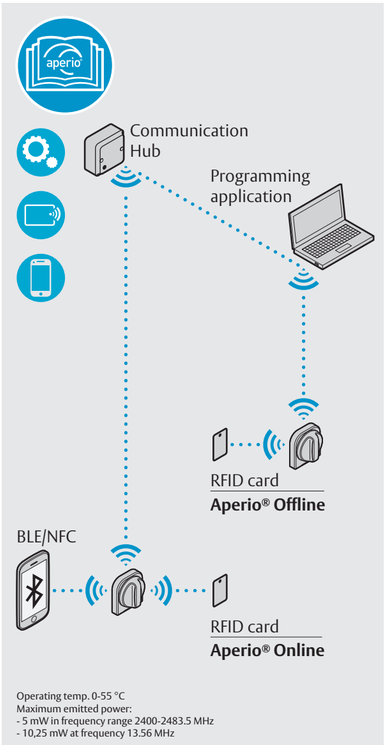
D001175648-001_Mounting_Instructions_Aperio_KL100_Page_2_Rev_06_Print.pdf 1 2023-08-03 10:38:46