mm [inch]

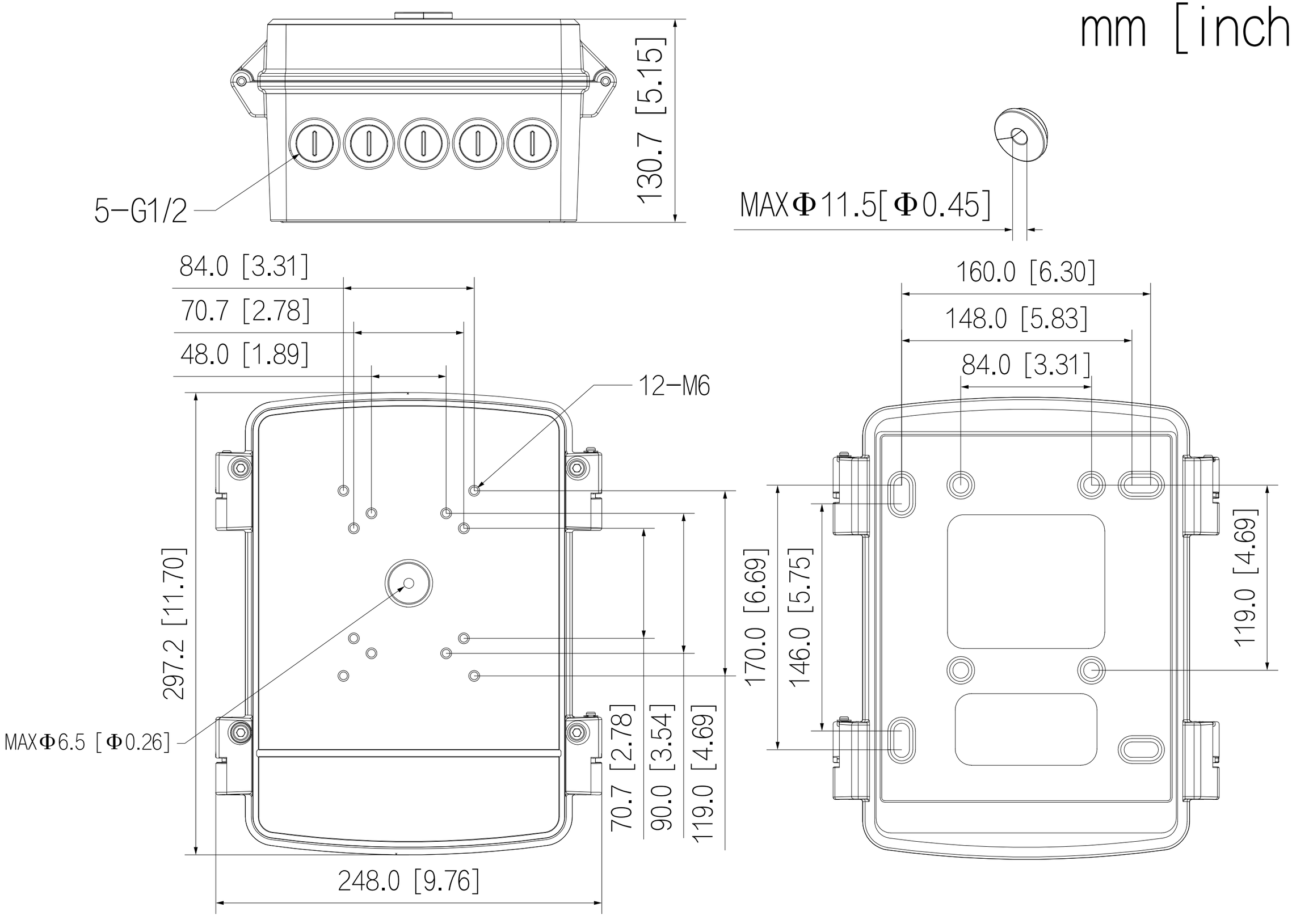
5-G1/2
130.7 [5.15]
MAXΦ11.5[Φ0.45]
84.0 [3.31]
70.7 [2.78]
48.0 [1.89]
12-M6
297.2 [11.70]
MAXΦ6.5 [Φ0.26]
70.7 [2.78]
90.0 [3.54]
119.0 [4.69]
248.0 [9.76]
160.0 [6.30]
148.0 [5.83]
84.0 [3.31]
170.0 [6.69]
146.0 [5.75]
119.0 [4.69]