mm [inch]

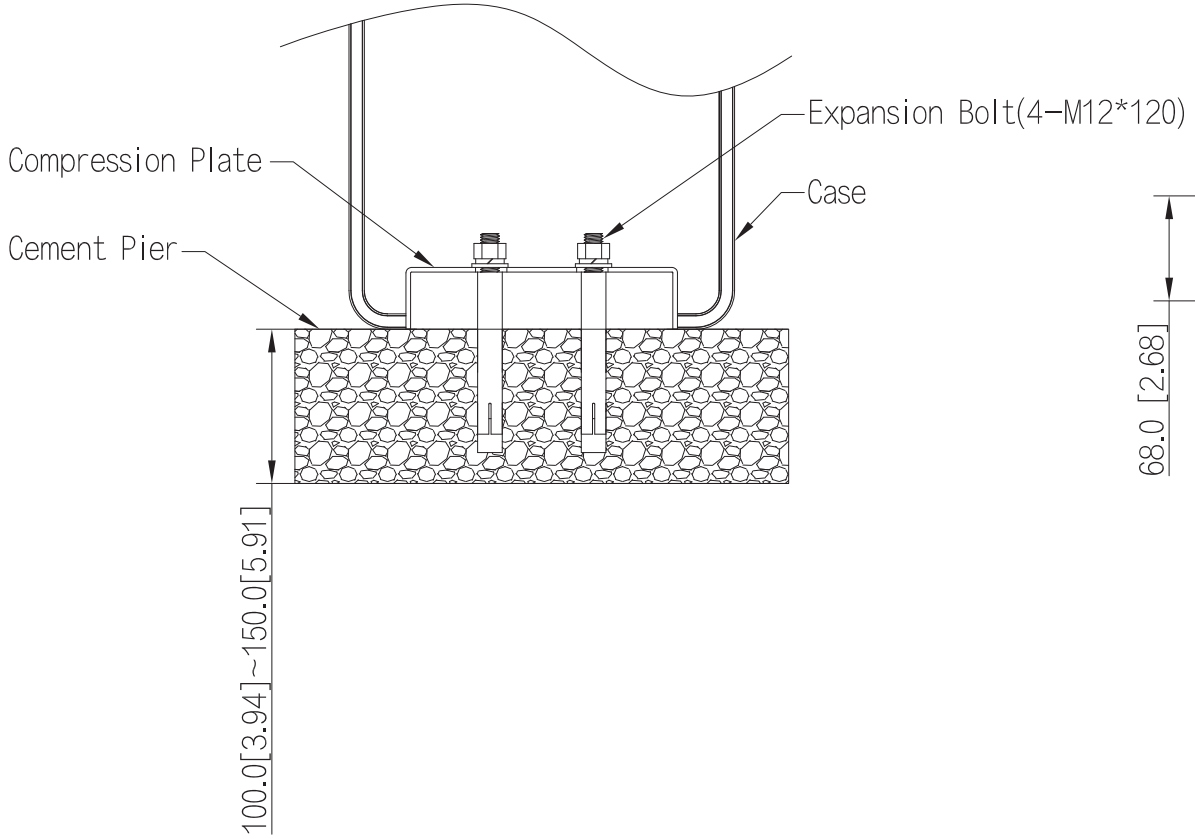
Expansion Bolt(4-M12*120)
Compression Plate
Case
Cement Pier
100.0[3.94]~150.0[5.91]

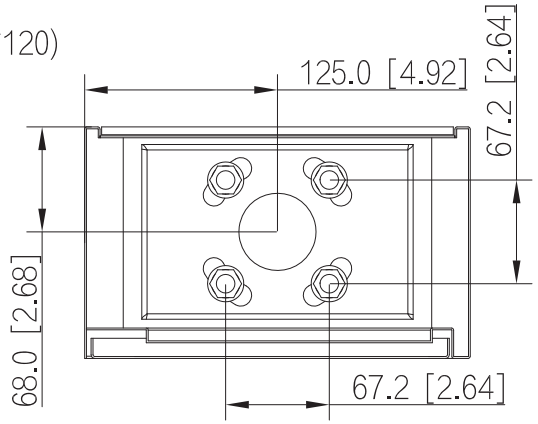
125.0 [4.92]
67.2 [2.64]
68.0 [2.68]
67.2 [2.64]