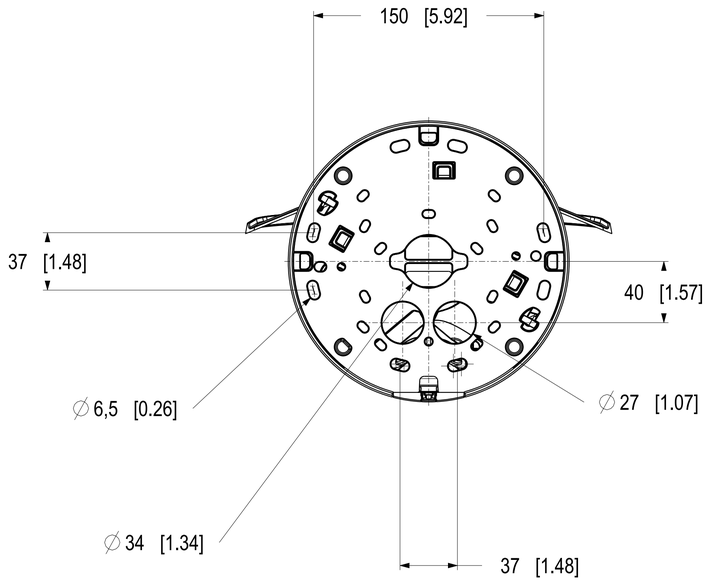

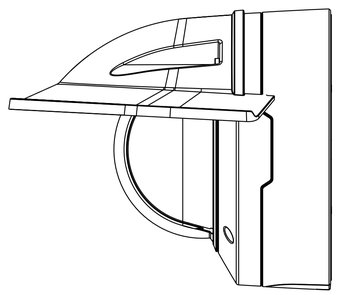

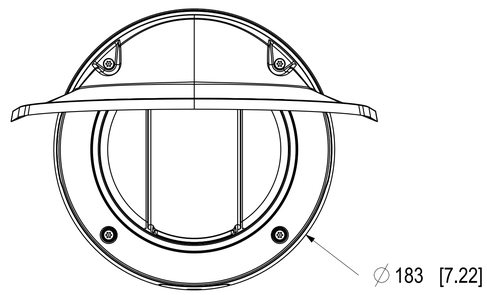

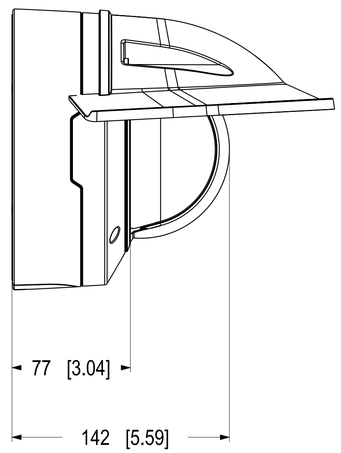

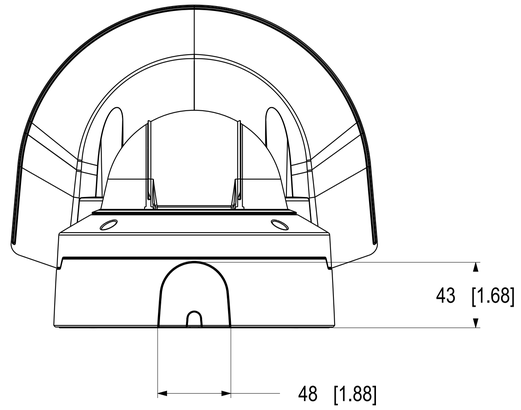

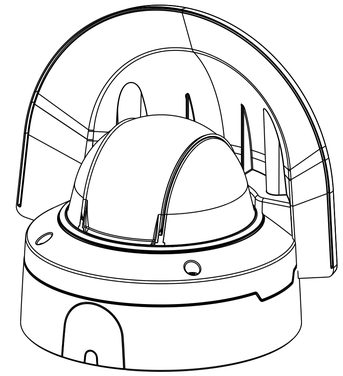

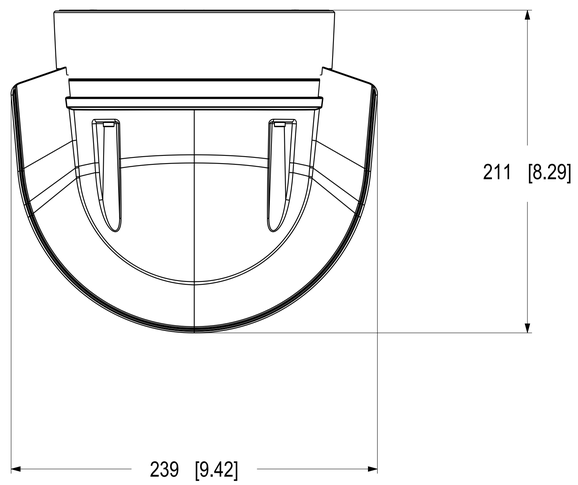

Dimensions in mm [inch]

Date	Version	Scale
2024 Oct-22	M1.4	1:2
Drawing Number	Size	Sheet
3175503	A1	1(1)

AXIS Q3546-LVE Dome Camera 10mm

© 2024 Axis Communications AB. All rights reserved.